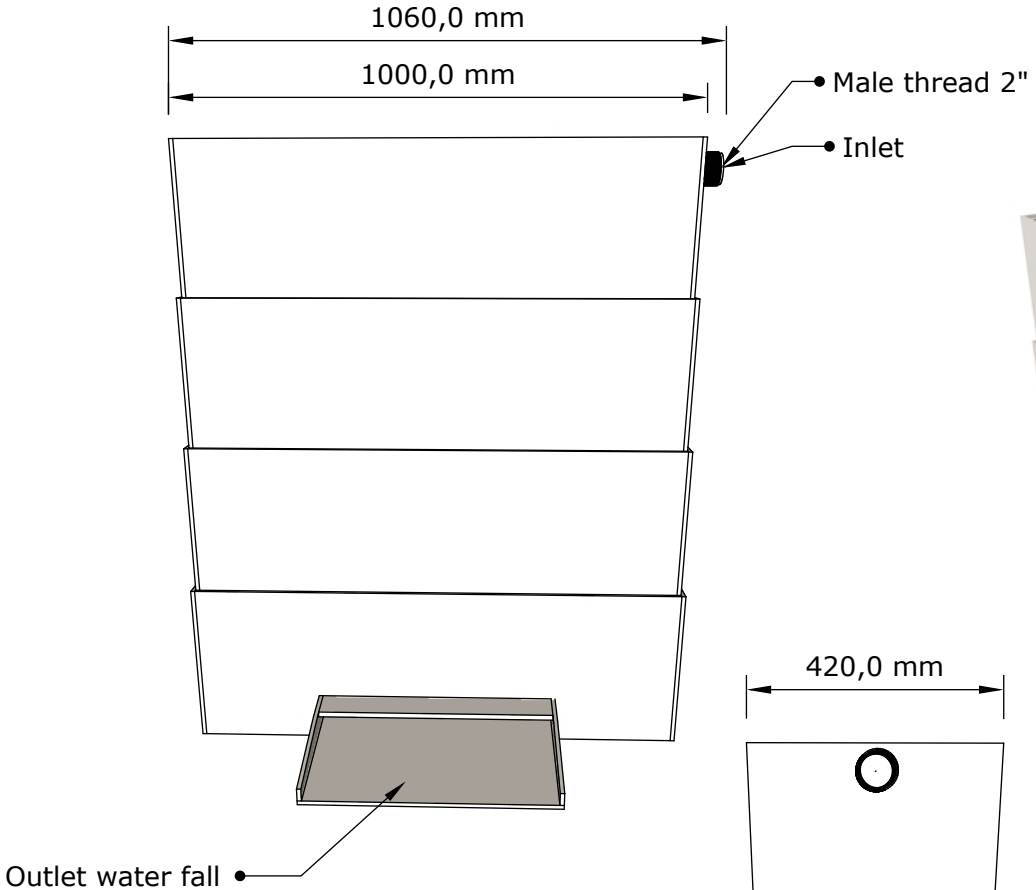

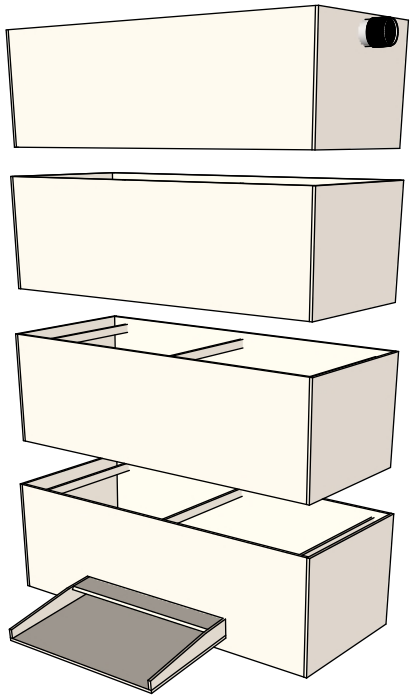

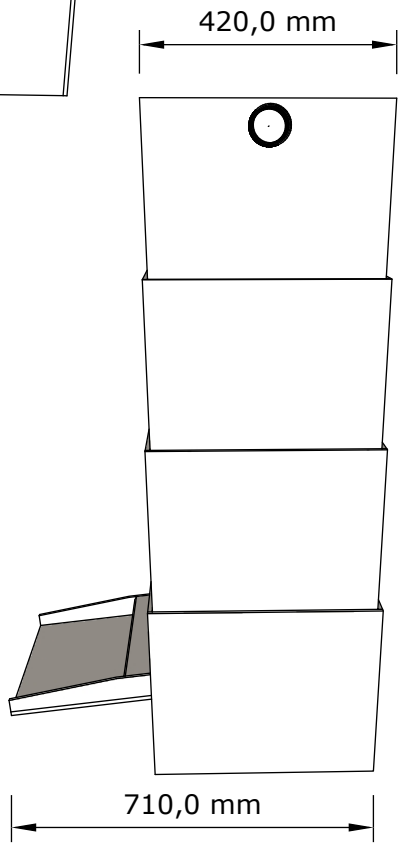

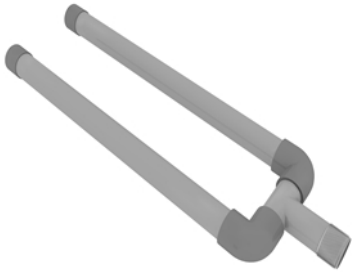

Trickle tower waterfall big	F2060004